Supplementary Material

A Low-Cost IoT System Based on the ESP32 Microcontroller for Efficient Monitoring of a Pilot Anaerobic Biogas Reactor

Sotirios D. Kalamaras*, Maria-Athina Tsitsimpikou, Christos A. Tzenos, Antonios A. Lithourgidis , Dimitra S. Pitsikoglou and Thomas A. Kotsopoulos *

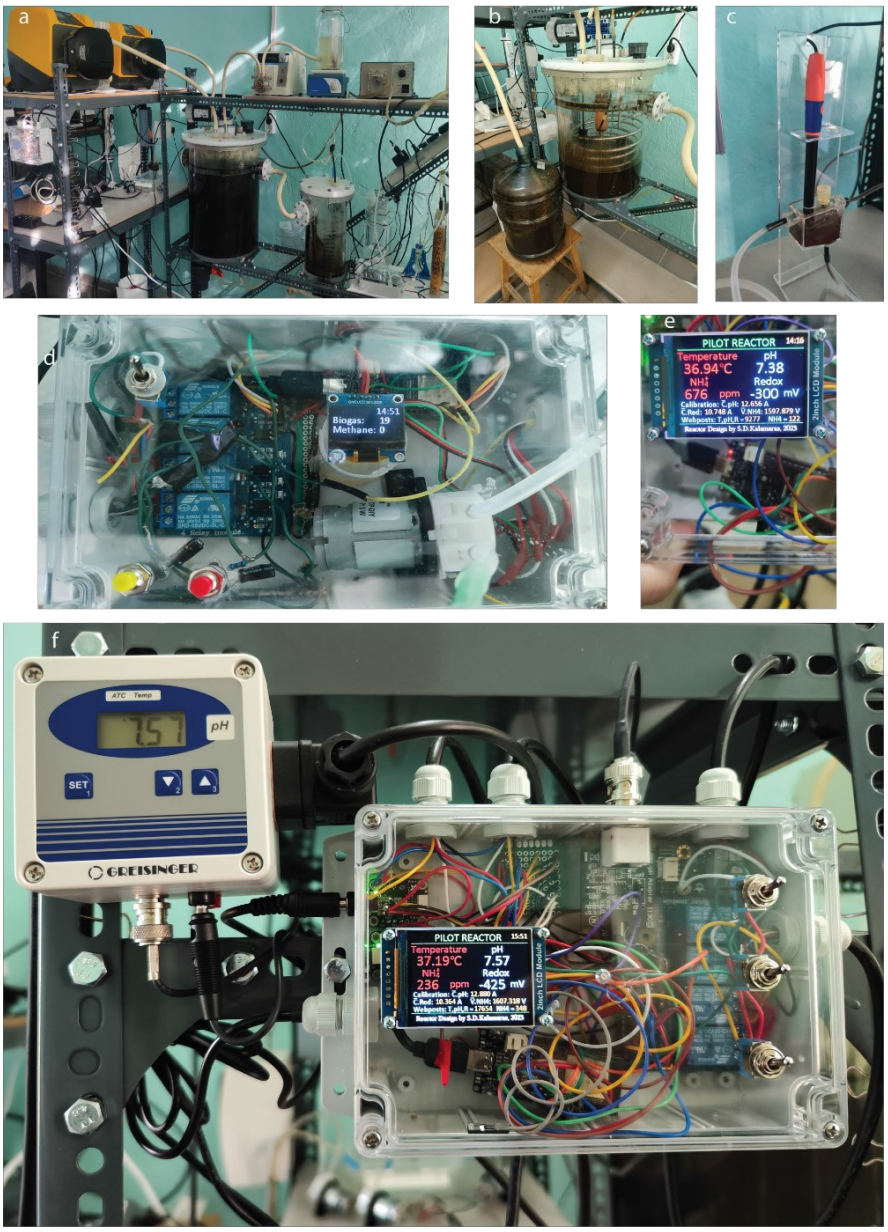

Figure S1. Photo images of the anaerobic bioreactor and the IoT devices. a. General view of the reactor and IoT devices, b. Filling of the reactor and view of the stainless-steel helix heat exchanger, c. Measurement cell and ammonium electrode during measurement, d. IoT device of ESP32 for volumetric gas measurements of biogas and its methane content showing real time values, e. Close view of the 2″ display of the IoT device for sensors logging showing real time values, and f. General view of the IoT device for sensors logging and Greisinger GPHU 014 MP-BNC transducer for pH, showing real time values.

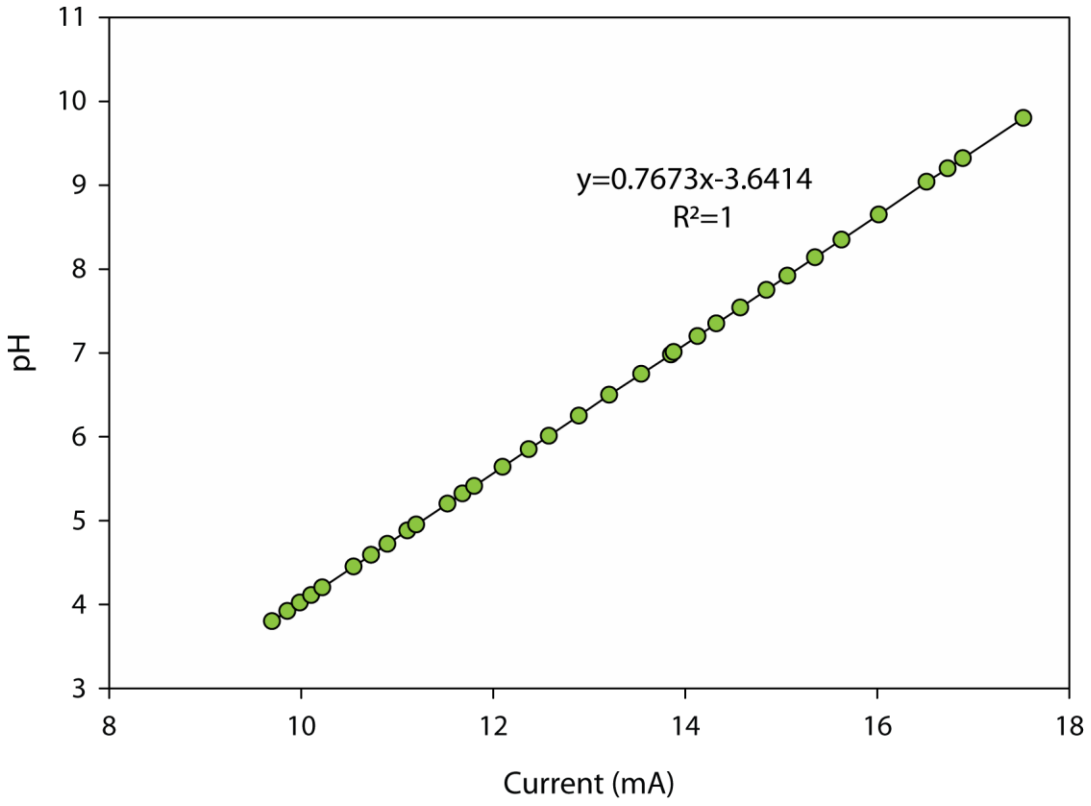

Figure S2. Measurements from the GPHU 014 MP-BNC transducer connected with Gravity: I2C Digital Wattmeter converters for the creation of the final equation of pH used by ESP32.

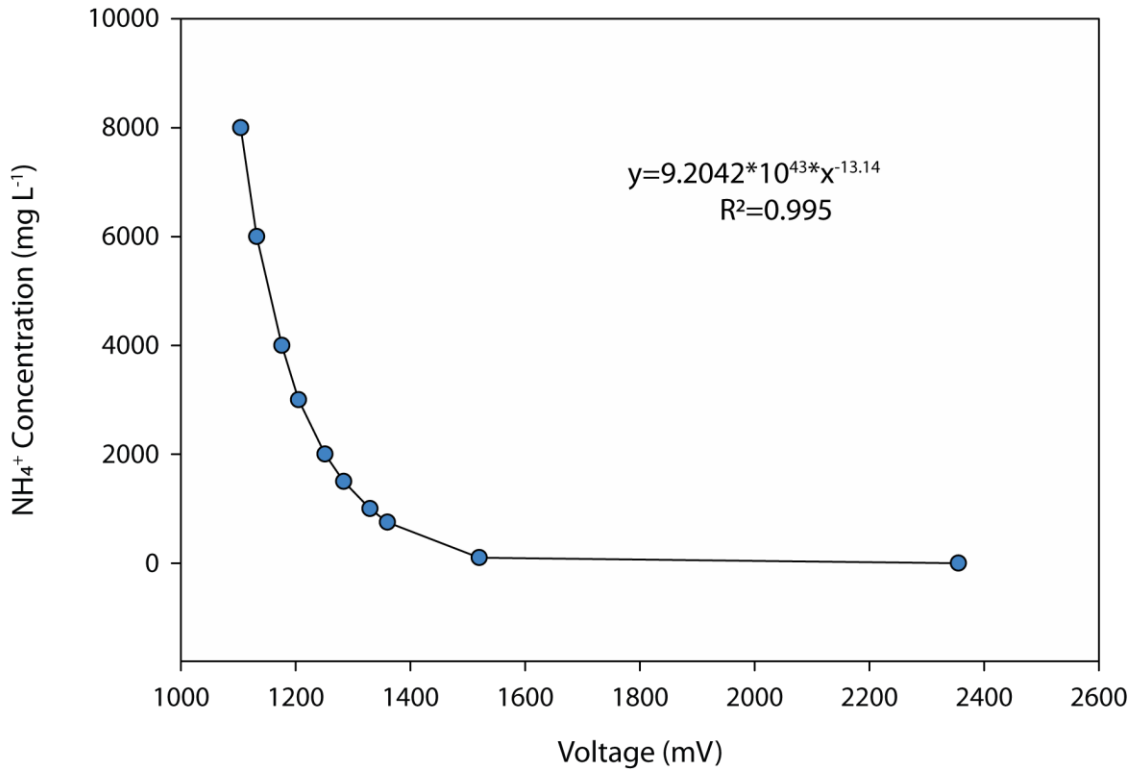

Figure S3. Measurements for ammonium equation creation by pH/OPR Adapter 1130 which provided analog voltage output and connected to the adapter ADS1115 16-Bit ADC over I²C to ESP32. Solutions with different concentrations were made by deionized water and appropriate addition of NH_4Cl, except for 100ppm and 1000ppm standards.

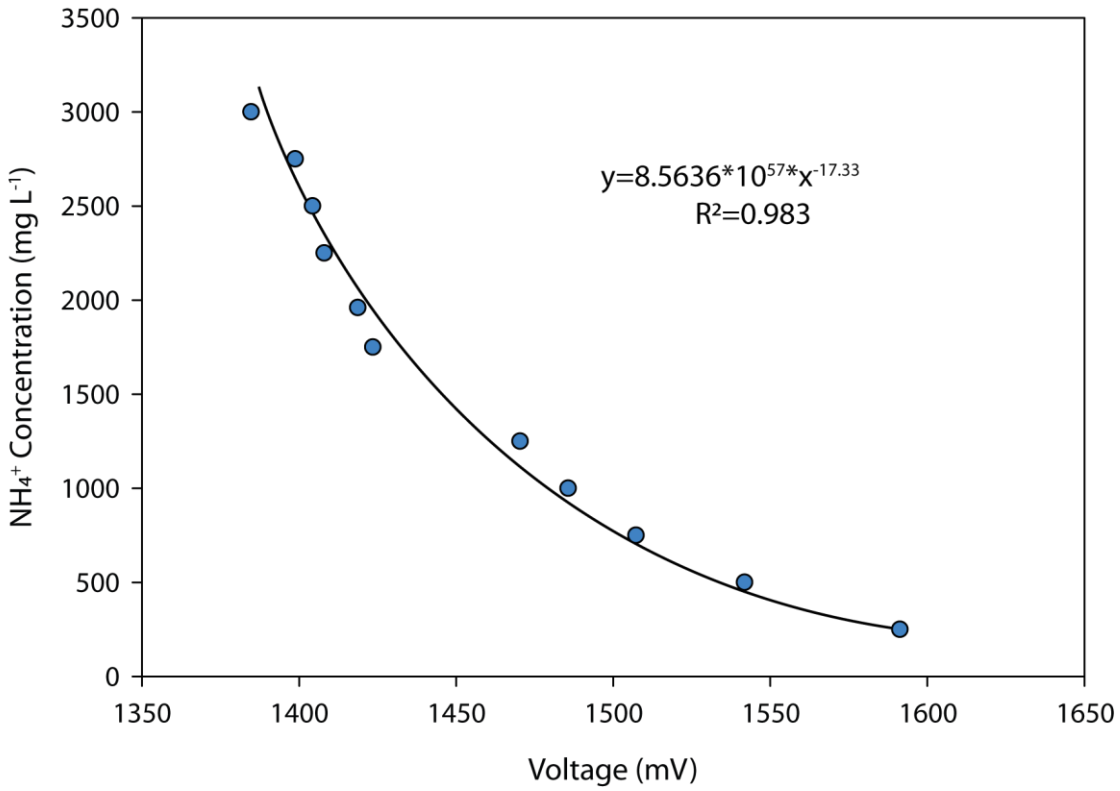

Figure S4. Measurements for second ammonium equation creation by pH/OPR Adapter 1130 which provided analog voltage output and connected to the adapter ADS1115 16-Bit ADC over I^2C to ESP32. Solutions with different concentrations were made by known concentration sample from the bioreactor and appropriate addition of NH_4Cl.

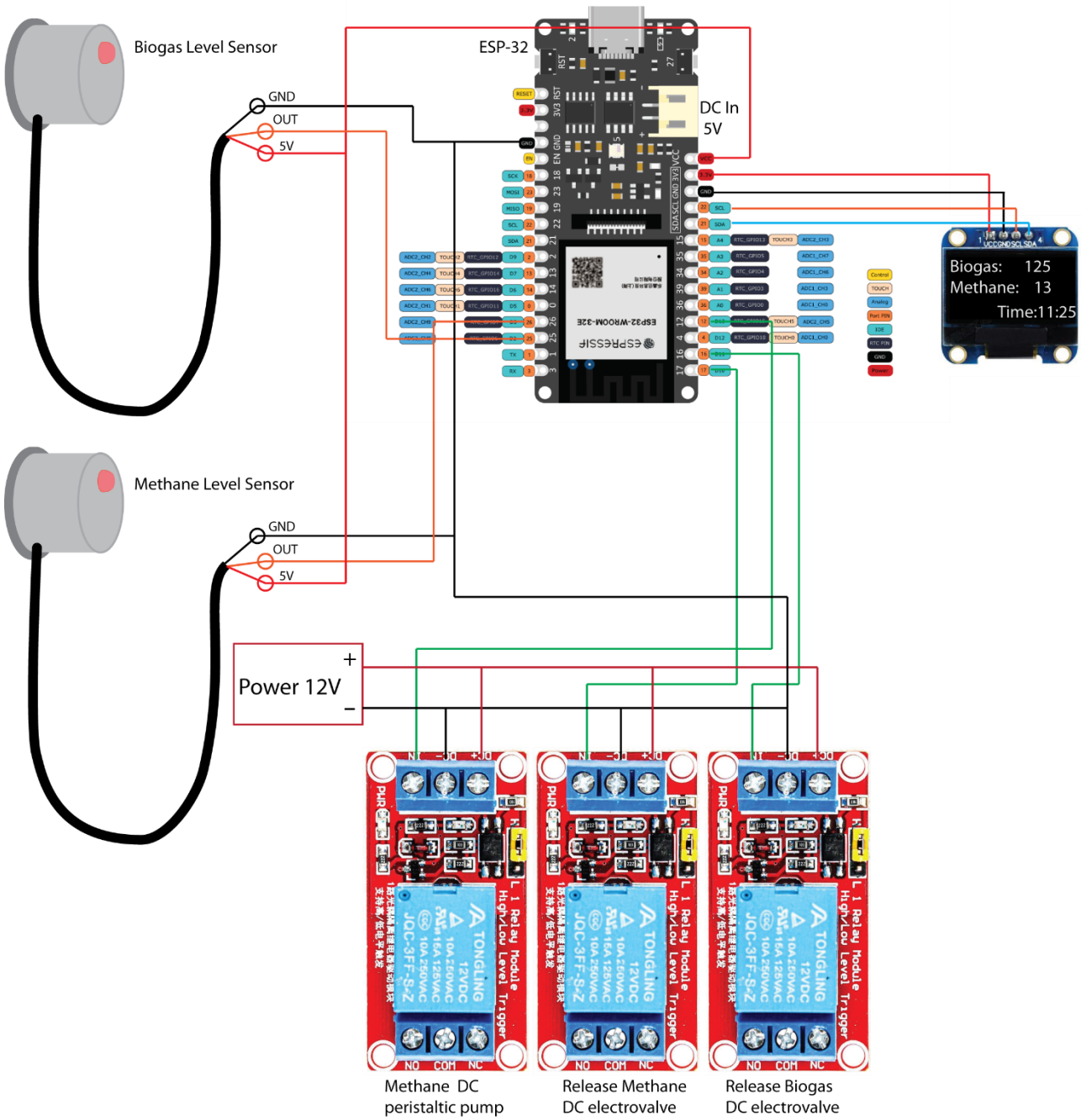

Figure S5. Circuit diagram showing the connections between different parts of the gas monitoring system based on the ESP-32 microcontroller .

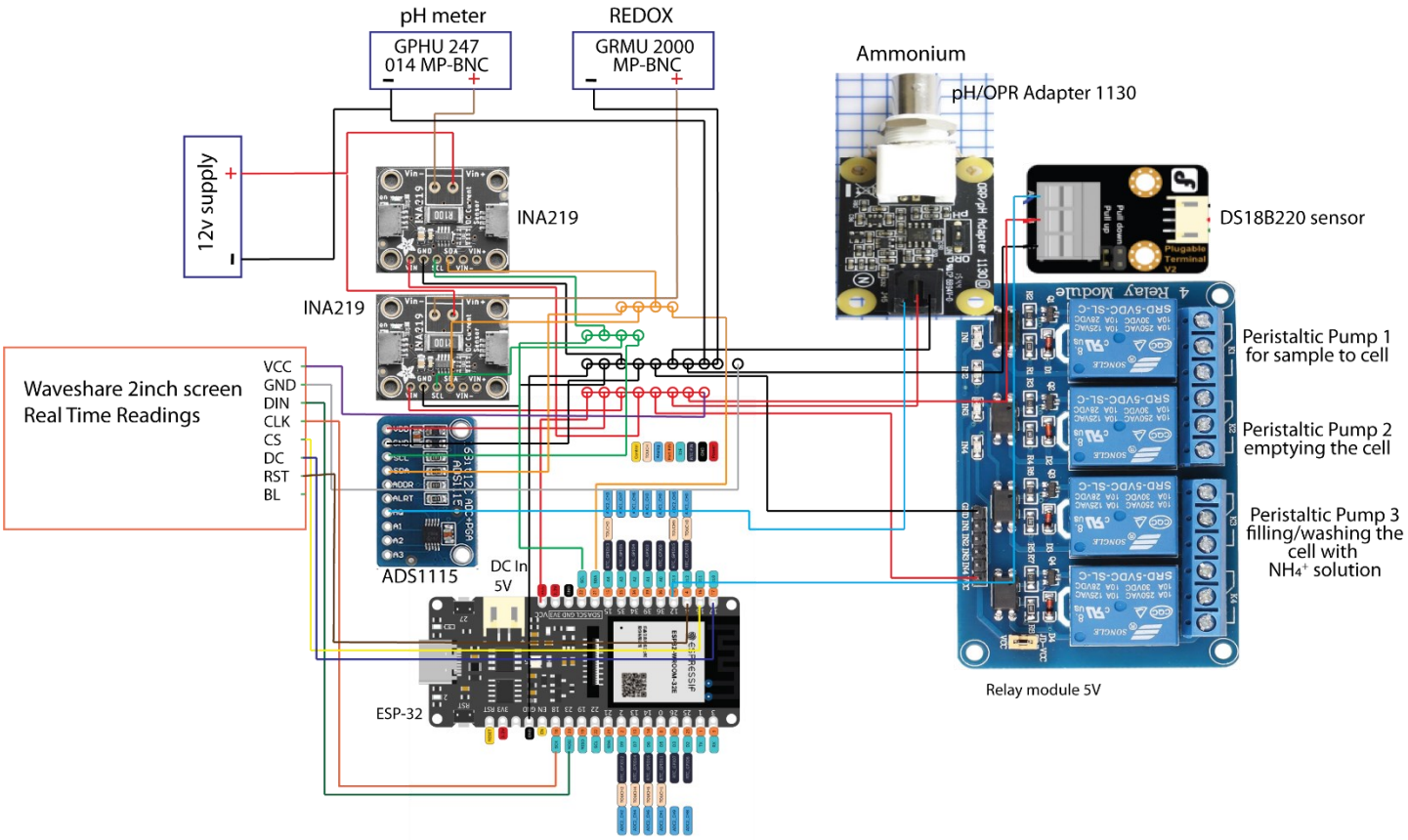

Figure S6. Circuit diagram showing the connections between different parts of the sensor monitoring system of pH, REDOX, temperature, and ammonium based on the ESP-32 microcontroller.

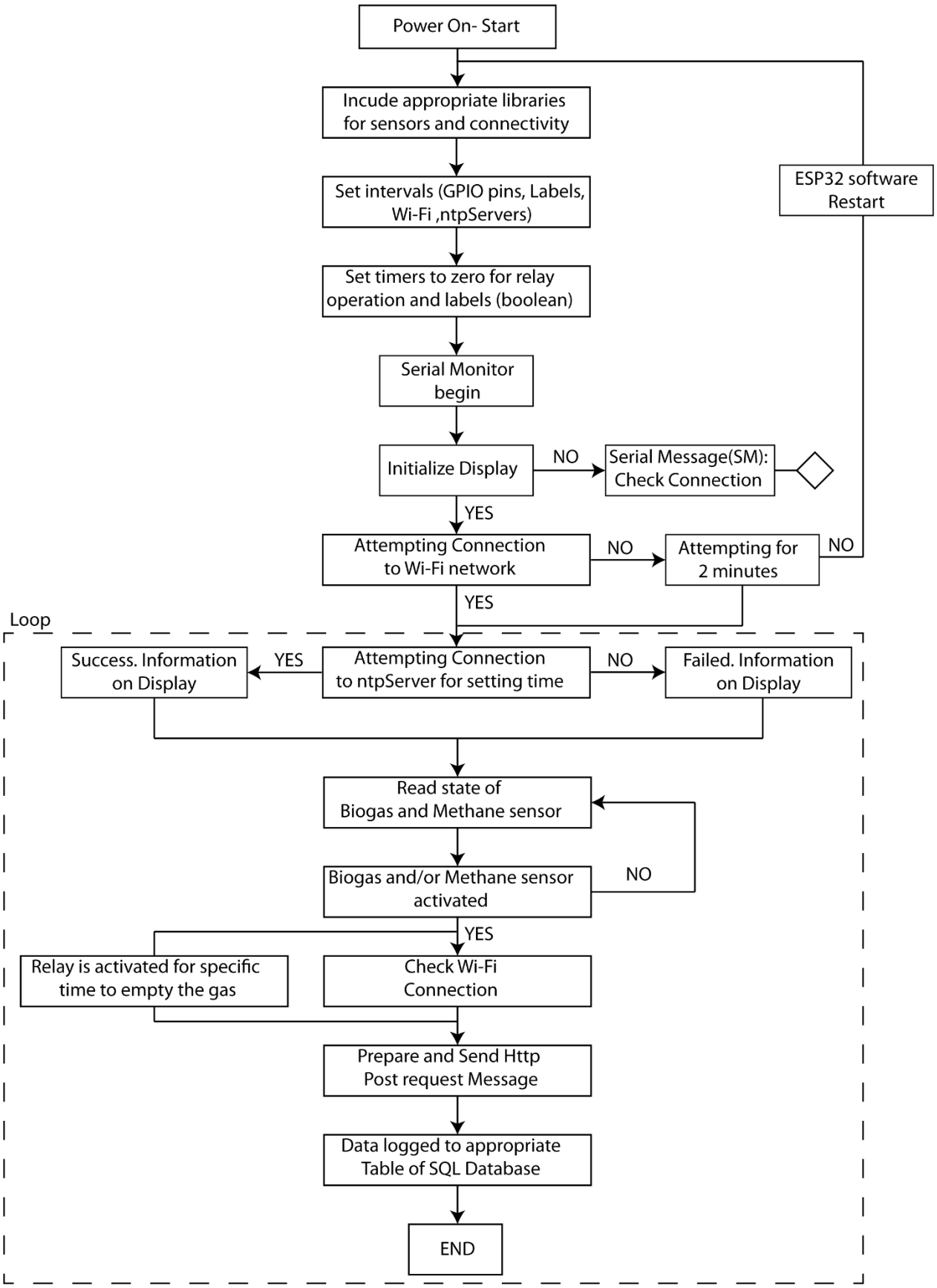

Figure S7. Software flowchart of gas monitoring system.

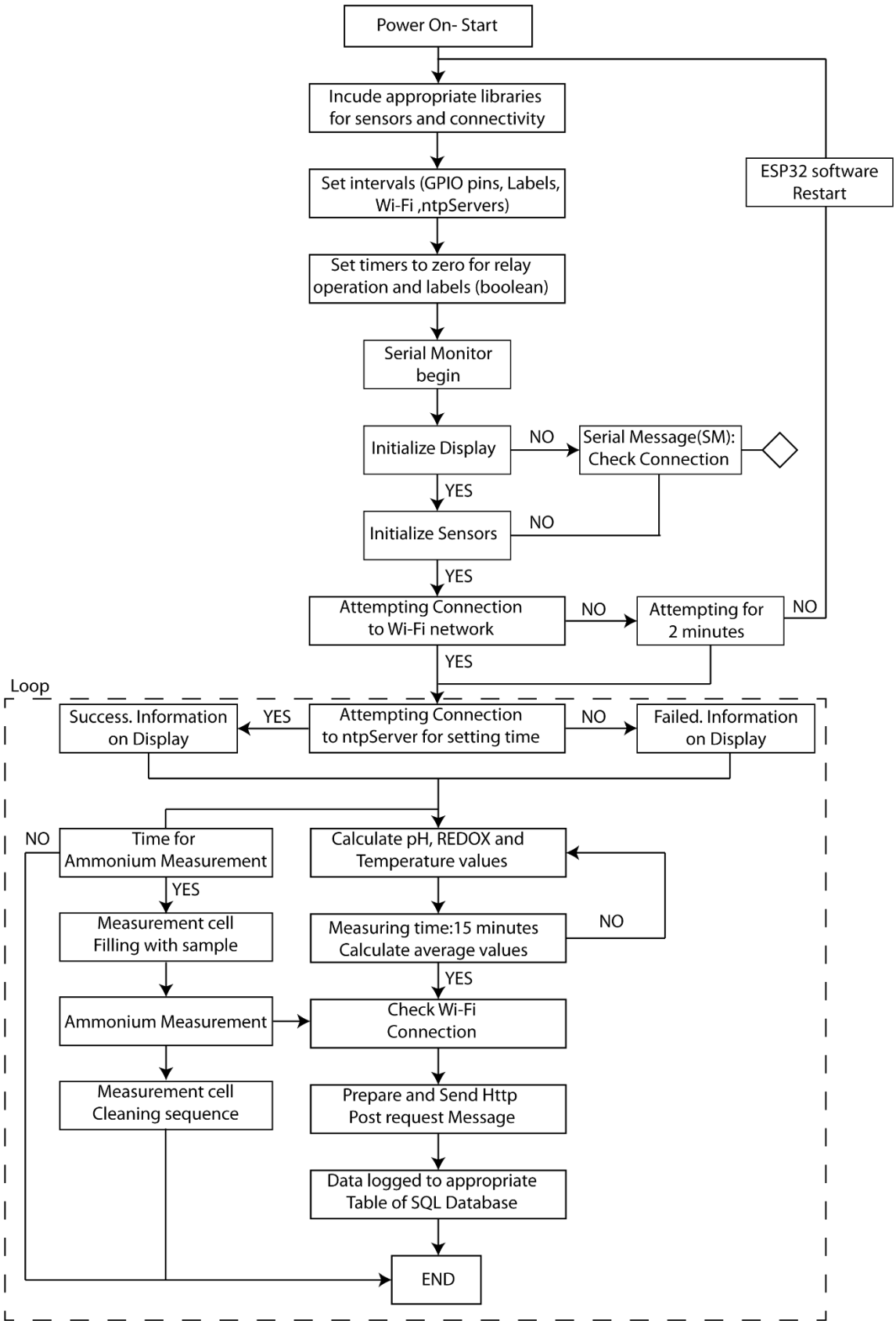

Figure S8. Software flowchart of sensor monitoring system of pH, REDOX, temperature, and ammonium.

Table S1. Measurement cell activation schedule of low-cost peristaltic pumps.

Step		**Peristaltic Pump 1**	**Peristaltic Pump 2**	**Peristaltic Pump 3**
	Operation	Sample from the bioreactor	Emptying the cell	filling/washing the cell with a solution of 100 ppm ammonium (AS)
1			Empty AS from cell	
2		Draw a small sample to flush out the old sample in the tubes	-	-
3		-	Emptying the sample from cell	-
4		Draw the sample for measurement	-	-
5		-	Emptying the cell	
6		-		Filling/Washing
7		-	Emptying	
8		-		Filling/Washing
9		-	Emptying	
10		-		Final filling